DIMENSIONAL TABLE							
PIPE DIA.	A	B	C	D	E	F	SAFETY BARS REQUIRED
12"	2'-6"	3'-8"	2'-11"	4'-0"	3'-3"	1'-6"	-
18"	3'-0"	4'-2"	3'-3"	4'-6"	3'-6"	1'-6"	1
24"	3'-6"	4'-8"	3'-6"	5'-0"	3'-9"	1'-6"	1
30"	4'-0"	5'-3"	4'-3"	5'-10"	4'-0"	1'-6"	2
36"	4'-6"	5'-11"	5'-0"	6'-4"	4'-3"	1'-8"	2
42"	5'-0"	6'-6"	5'-9"	6'-11"	4'-6"	1'-10"	3
48"	5'-6"	7'-2"	6'-6"	7'-5"	4'-9"	2'-0"	3
60"	6'-6"	8'-5"	8'-0"	8'-6"	5'-3"	2'-4"	4
72"	7'-6"	9'-9"	9'-6"	9'-7"	5'-9"	2'-8"	5

NOTES:
1. CONCRETE TO BE COMPRESSIVE STRENGTH 4000 PSI AIR ENTRAINED TYPE II CEMENT.
2. INSTALL IMPERMEABLE TRENCH DAM ANTI-SEEP COLLAR AROUND DRAIN PIPE PRIOR TO HEADWALL LOCATION
3. SAFETY BARS TO BE OMITTED WHERE INDICATED ON PLANS.
4. SAFETY BARS TO BE SET TO CREATE EQUAL OPENING DIMENSIONS.

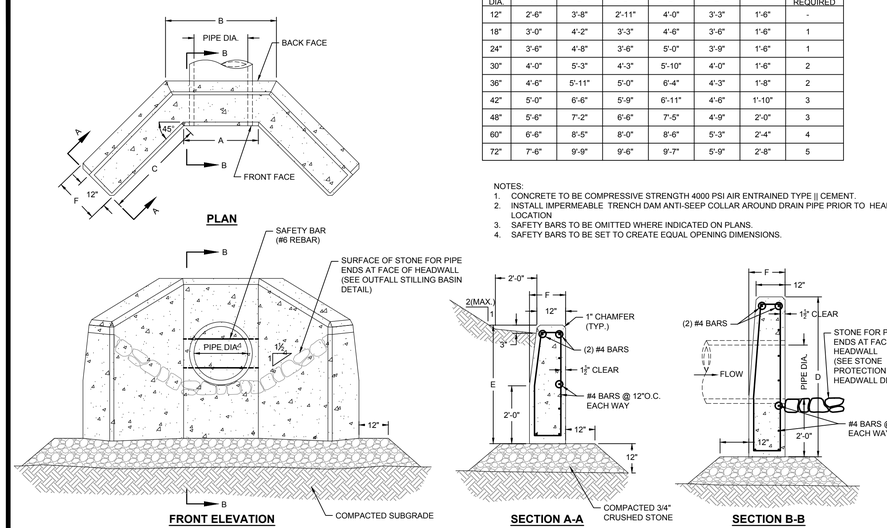

CONCRETE HEADWALL (HW) WITH WINGWALLS
NOT TO SCALE

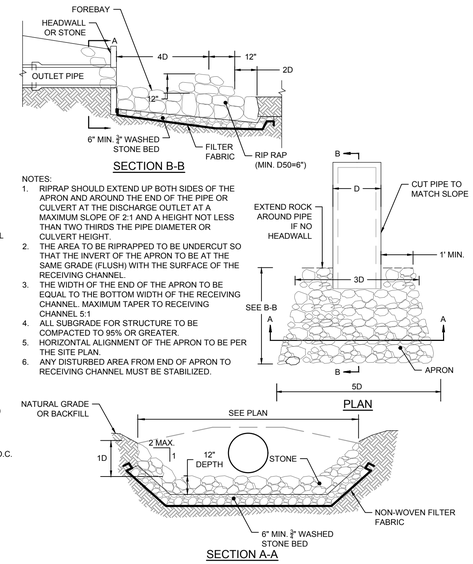

NOTES:
1. RIPRAP SHOULD EXTEND UP BOTH SIDES OF THE APRON AND AROUND THE END OF THE PIPE OR CULVERT AT THE DISCHARGE OUTLET AT A MAXIMUM SLOPE OF 2:1 AND A HEIGHT NOT LESS THAN TWO THIRDS THE PIPE DIAMETER OR CULVERT HEIGHT.
2. THE AREA TO BE RIPRAPPED TO BE UNDERCUT SO THAT THE INVERT OF THE APRON TO BE AT THE SAME GRADE (FLUSH) WITH THE SURFACE OF THE RECEIVING CHANNEL.
3. THE WIDTH OF THE END OF THE APRON TO BE EQUAL TO THE BOTTOM WIDTH OF THE RECEIVING CHANNEL, MAXIMUM TAPER TO RECEIVING CHANNEL 5:1
4. ALL SUBGRADE FOR STRUCTURE TO BE COMPACTED TO 95% OR GREATER.
5. HORIZONTAL ALIGNMENT OF THE APRON TO BE PER THE SITE PLAN.
6. ANY DISTURBED AREA FROM END OF APRON TO RECEIVING CHANNEL MUST BE STABILIZED.

OUTFALL STILLING BASIN DETAIL
NOT TO SCALE

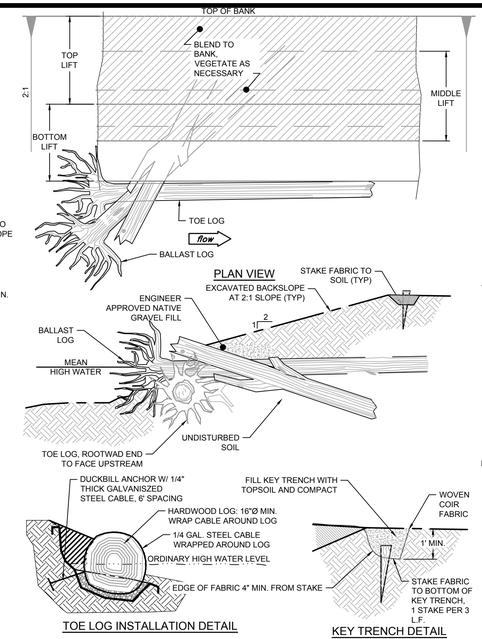

TOE LOG INSTALLATION DETAIL

KEY TRENCH DETAIL

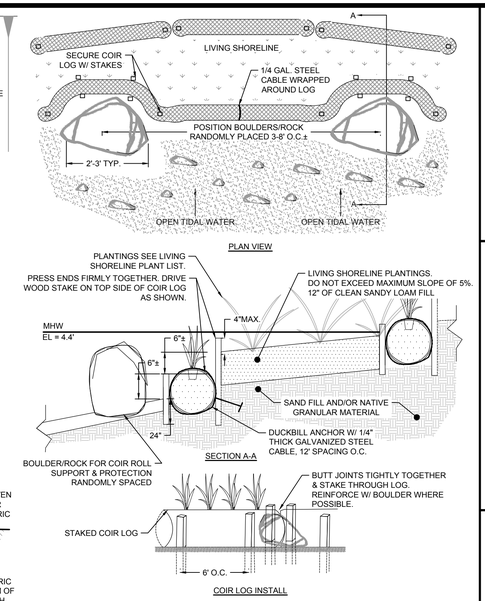

COIR FIBER LOG & LIVING SHORELINE STABILIZATION DETAIL
NOT TO SCALE

Living Shoreline Plant List

Key	*Botanical Name*	Common Name	Size	Spacing
DS	*Distichlis spicata*	Saltgrass	Bare Root	12" O.C.
JCS	*Juncus gerardii*	Saltmeadow Rush	Bare Root	18" O.C.
LL	*Limonium carolinianum*	Carolina Sea-Lavender	#1	24" O.C.
SD	*Salicornia depressa*	Common Glasswort	#1	24" O.C.
SPA	*Spartina alterniflora*	Smooth Cordgrass	2" plugs	18" O.C.
SPP	*Spartina patens*	Saltmeadow Cordgrass	2" plugs	18" O.C.

NOTES:

1. MEAN HIGH WATER WAS DETERMINED BASED ON FIELD INDICATORS. THE NEAREST NOAA TODAL DATUM STATION WITH DATUMS BASED ON THE LATEST 19-YEAR TIDAL EPOCH IS SOUTH PLUM ISLAND SOUND, WHICH IS TOO FAR AWAY FOR REFERENCE AT THIS SITE.
2. PROPOSED DEPTH OF LIVING SHORELINE WILL BE NO MORE THAN 12" OF CLEAN SANDY LOAM FILL.
3. THE TOPOGRAPHICAL SURVEY, EXISTING CONDITIONS BASE MAP WERE PROVIDED BY CONECO ENGINEERS AND SCIENTISTS AND TAKEN FROM THE PLAN ENTITLED "9581 AOC 4". SURVEY WAS PERFORMED APRIL 2017.
4. THE ELEVATIONS DEPICTED HEREON WERE BASED ON THE NORTH AMERICAN VERTICAL DATUM (NAVD) OF 1988.
5. UNDERCUT/EROSION LINE FLAGGED BY IPSWICH CONSERVATION AGENT ALICIA GEILEN, APRIL 2017. THIS LINE WAS USED TO IDENTIFY THE MEAN HIGH WATER LINE.

NOTES:
1. COIR FABRIC (I.E., COCONUT EROSION CONTROL BLANKET); NONWOVEN COIR (INNER) AND WOVEN COIR (OUTER). NONWOVEN COIR FABRIC SHALL BE 'GEOCOIR 700' OR APPROVED EQUAL, ABLE TO WITHSTAND 10 FPS WATER VELOCITIES AND 4.46 PSF SHEAR STRESS.
2. LOGS SHALL BE HARDWOOD LOGS, 16"Ø (MIN.), 20'-30' LONG WITH 4'Ø ROOTWAD. BRANCHES AND ROOTS SHALL BE REMOVED. CABLE SMALLER LOGS TOGETHER IN CLUMPS OF TWO OR THREE.
3. PLACE LOGS SUCH THAT AT 1/3 OF THE LOG LENGTH PROJECTS ABOVE ORDINARY HIGH WATER LINE. ANGLE WITH BANK CAN VARY FROM MIN. 15° TO A MAX. OF 45° DEPENDING ON LENGTH OF BEACHING SLOPE AND LENGTH OF TREE. AT LEAST 1/3 OF THE LOG SHOULD BE BEDDED FIRMLY INTO BANK. PLACE GRAVEL AND COBBLE FILL ALONG TRUNK TO HELP PREVENT MOVEMENT. PLACE GRAVEL AND COBBLE FILL BETWEEN TREE TRUNKS TO PROTECT EXPOSED FINE GRAINED BANK MATERIAL.
4. INSTALL LOGS TO OVERLAP EACH OTHER.
5. BALLAST LOG SHALL BE CABLE TIED & WRAPPED TIGHTLY TO TOE LOG FOR A SECURE RESTRAINT. EMBED BALLAST LOGS 13" MIN. INTO BANK.
6. SECURE LOG INTO BANK WITH A DUCKBILL ANCHOR AND CABLE SET AT A MINIMUM OF 6' SPACING. ALTERNATIVE SECURING METHOD WITH REBAR AND DEADMAN SET IN BANK ACCEPTABLE WITH PRIOR ENGINEER APPROVAL.
7. BEGIN AND END REINFORCEMENT AT STABLE BANK POINTS.

LOG REINFORCEMENT & ROOT WAD BANK STABILIZATION
NOT TO SCALE

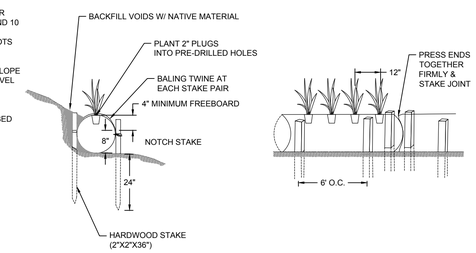

COIR FIBER LOG
NOT TO SCALE

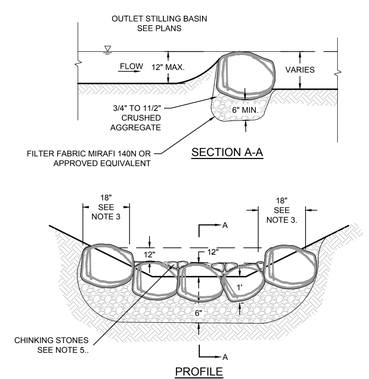

NOTES:
1. STONE SIZE: MINIMUM WIDTH AND LENGTH - 24"-36".
2. PLACE THE STONES ACROSS THE WIDTH OF THE OUTLET STILLING BASIN AREA.
3. KEY STONE INTO THE EMBANKMENT. EXTEND INTO EMBANKMENT A MINIMUM OF 18" TO PREVENT FLOW FROM DIVERTING THE CHECK DAM.
4. ADD CHINKING STONES AS NECESSARY TO FILL CREVICES BETWEEN STONES.
5. CONSTRUCT THE TOP OF THE CHECK DAM SO THE CENTER IS APPROXIMATELY 6" LOWER THAN THE OUTER EDGES, FORMING A WEIR THAT WATER CAN FLOW ACROSS.
6. DO NOT EXCEED A MAXIMUM HEIGHT OF 12".

OUTLET STILLING BASIN W/ CHECK DAM
NOT TO SCALE

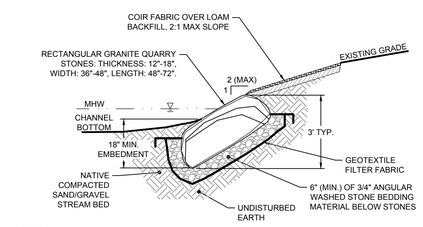

NOTES:
1. ALL QUARRY STONE TO BE LARGE, FLAT STACKABLE GRANITE STONES WITH A TYPICAL WEIGHT OF 700 - 1200 LBS (SEE SPECIFICATIONS).
2. STONE MATERIAL AND SIZES TO BE APPROVED BY THE ENGINEER.

GRANITE TOE PROTECTION
NOT TO SCALE

GRAPHIC SCALE
10 0 5 10 20 40
(in feet)
1 INCH = 10 FEET

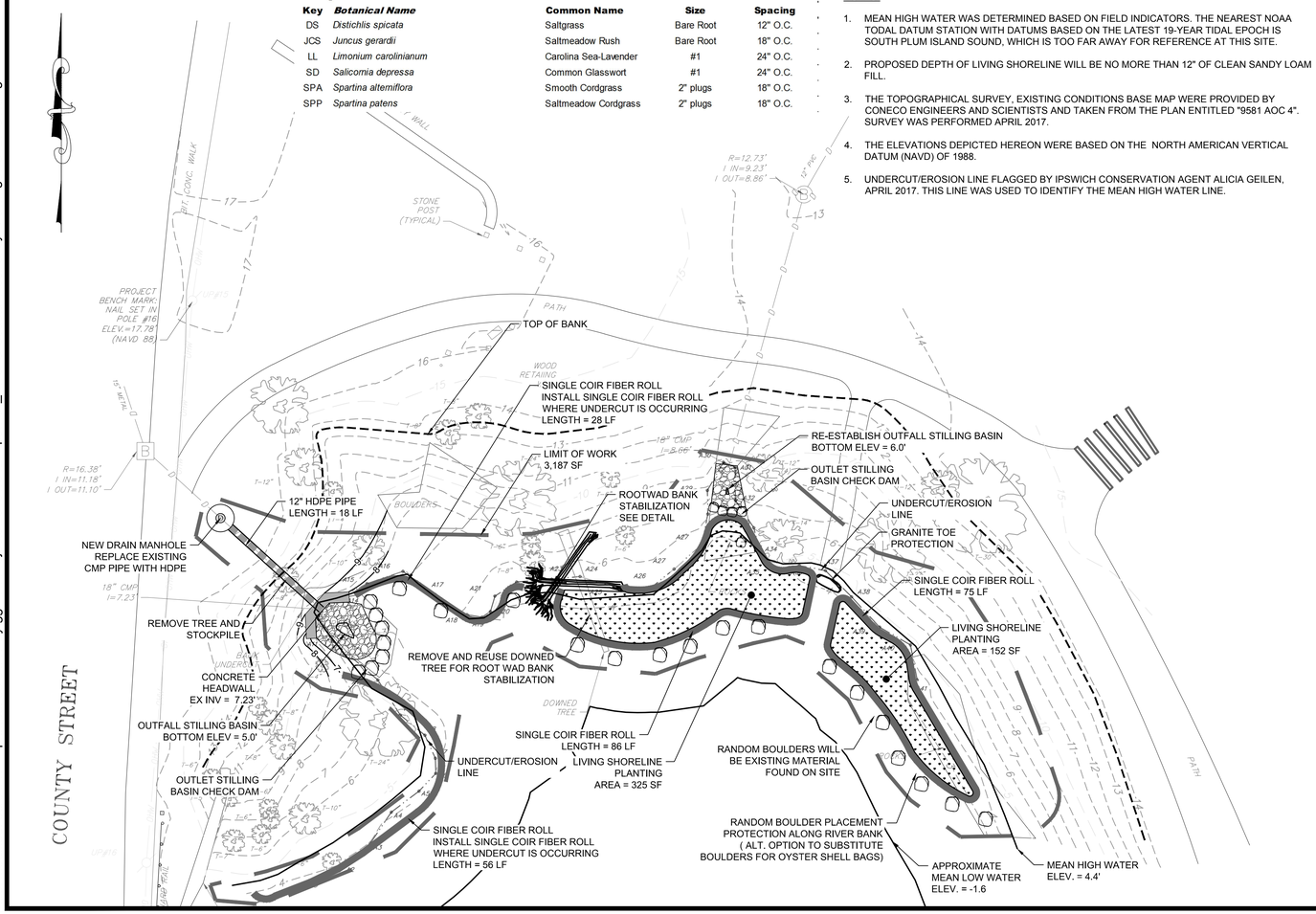

Revisions

Rev.	Date	By	Appr.	Description

Horsley Witten Group, Inc.
Sustainable Environmental Solutions
www.horsleywitten.com
90 Route 6A
Sandwich, MA 02563
508-833-6600 voice
508-833-3150 fax

Checked By: RAC
Drawn By: GES
Designed By: GES
Date: MAY 2017

Plan Set: IPSWICH RIVER COASTAL RESILIENCY 30% DESIGN IPSWICH, MASSACHUSETTS

Plan Title: AOC 4 - LAYOUT PLAN

Prepared For:
Town of Ipswich
25 Green Street
Ipswich, MA 01938
Phone: (508) ***-****
Fax: —

Survey Provided By:
Horsley Witten Group, Inc.
90 Route 6A
Sandwich, MA 02563
Phone: (508) 833-6600
Fax: (508) 833-3150
Dated: MONTH 2010

Registration:
DRAFT NOT FOR CONSTRUCTION

Project Number: 16127
Sheet: 2 of 2
Sheet Number: C - 2

last modified: 05/04/17 printed: 05/04/17 by gg H:\Projects\2016\16127 Ipswich_River & Coastal Resiliency\Drawings\16127-ST.dwg